A swing-door operator (or swing-door opener or automatic swing-door operator) is a device that operates a swing door for pedestrian use. It opens or helps open the door automatically, waits, then closes it. Udohow **swing door operator** are durable, stylish, and low maintenance. Automatic swing operators are silent and subtle. You can transform almost any manual door into an automatic swing door. Operators can be used in new construction or retro-fit onto existing doors. Udohow’s swing doors are designed for high traffic and heavy-duty use. Self-learning microprocessor controls adjust swing door speed for smooth opening and closing. Automatics function in low-energy or full-power mode.

Intelligent Automatic Flat Door system

Installation mode

Pull-arm mounting: Suitable for door wing opening inward (drive system inside)

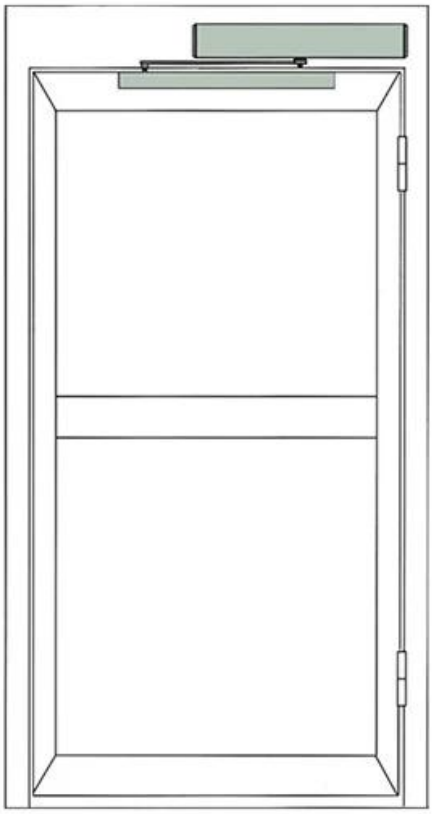

Push Arm Installation: Suitable for door wing opening outward (drive system inside)

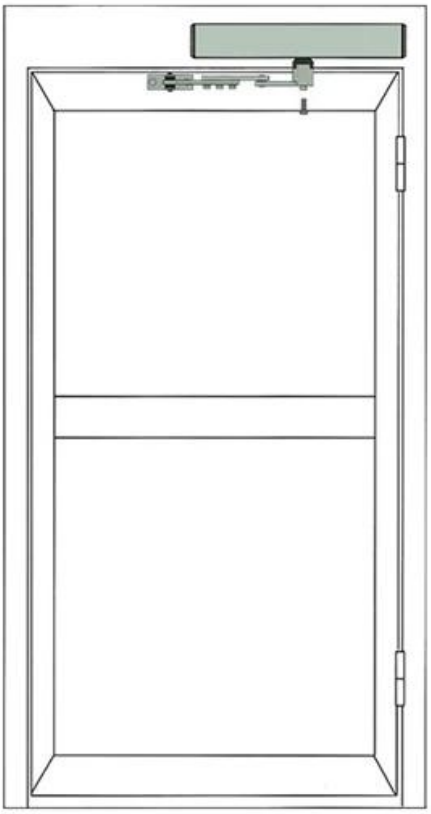

Installation

Pull-arm mounting: Suitable for door wing opening inward (drive system inside)

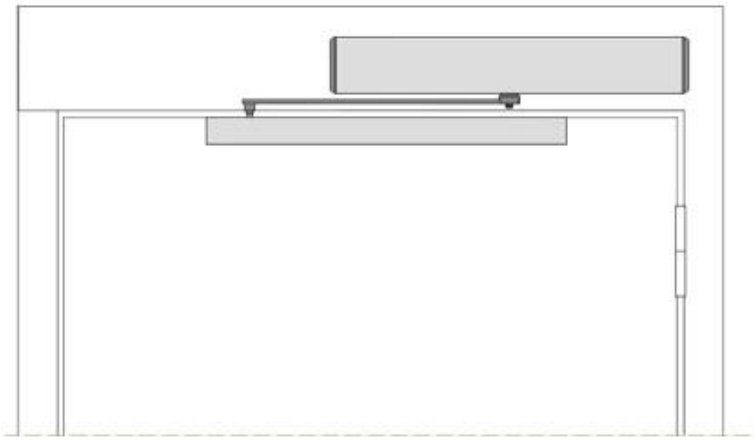

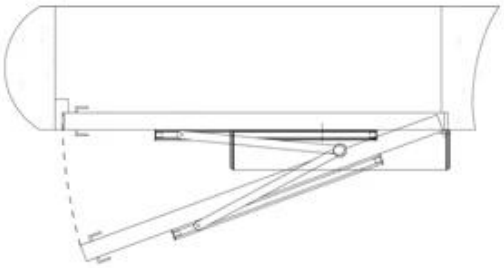

Push Arm Installation: Suitable for door wing opening outward (drive system inside)

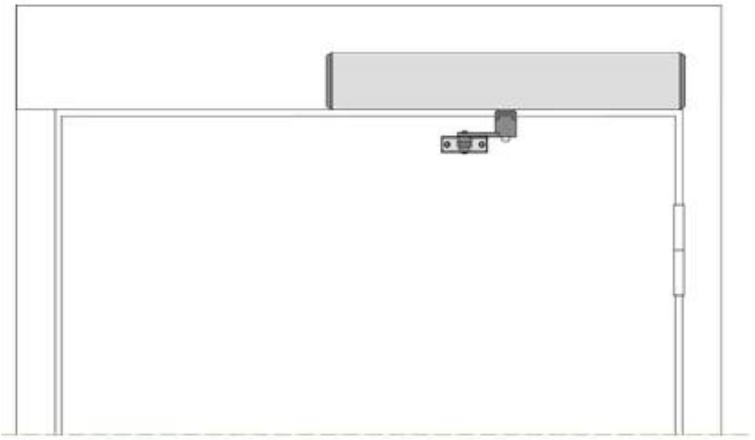

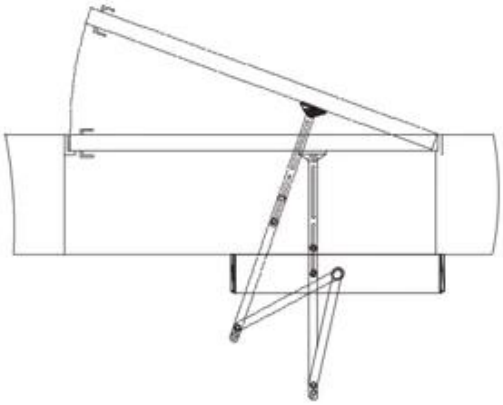

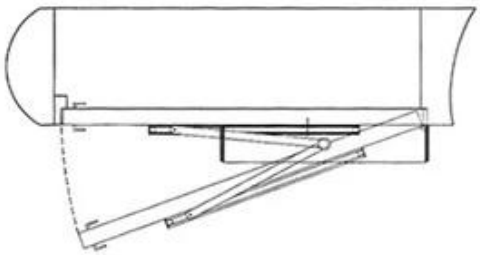

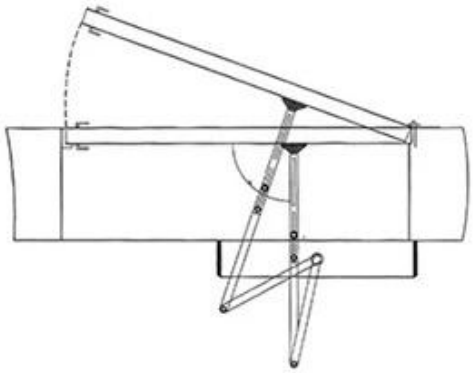

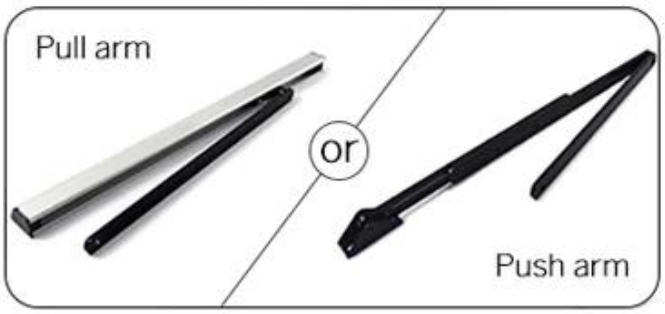
Pull arm
or
Push arm

M-204T (Optional)

Dimensions(mm)

Pull arm

Push arm

Function:

Power supply: 200V~240V
Opening time: 3~7s / 90°
Opening and holding time: 1-30s

Protection level: IP12D
Product weight: 6.5Kg
Product volume: 515x95x90mmc

The Udohow DH-ED100 is an intelligent, heavy-duty electromechanical swing door operator. It provides low noise during operation and it is the ideal choice for applications with high demands on gentle and smooth operation in combination with strength and high traffic flow. It compensates for stack pressure and wind load and yet remains easy to open manually. It is the ideal choice for heavy traffic flow entrances in healthcare, residential, office and public service environments where both low noise and ease of access are important.

Udohow provides a unique double-acting solution giving panic break-out in both directions with automatic reset. An optional embedded battery back-up and monitoring ensures operation even when the power is interrupted, while an intelligent locking function adds security.