DH-200P[illegible]1[illegible]

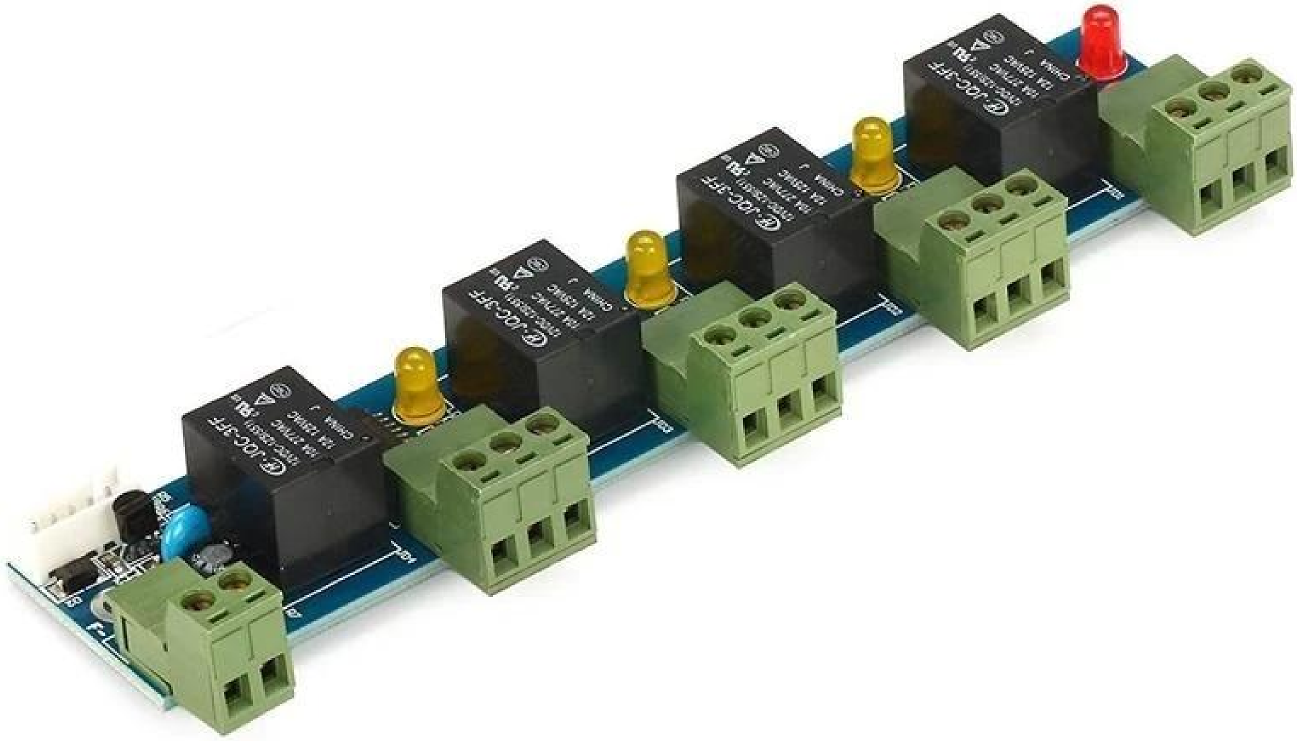

[illegible]

[illegible] 4[illegible]

ii[illegible]theFire[illegible]

iii[illegible]

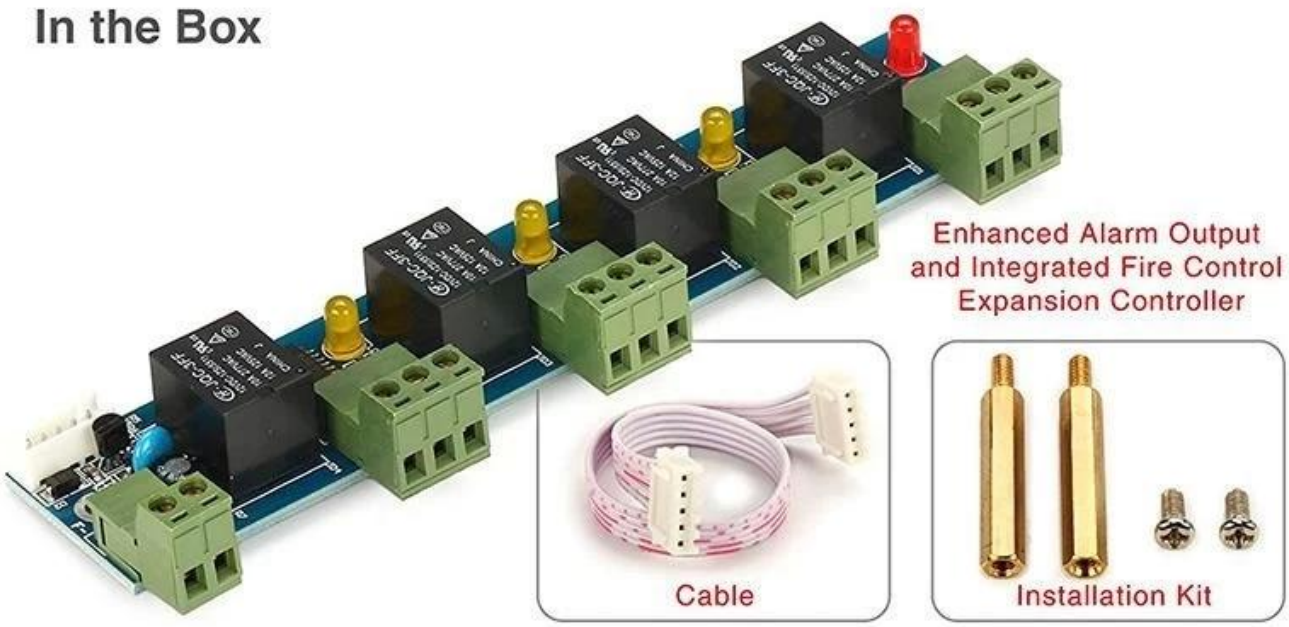
In the Box
Enhanced Alarm Output
and Integrated Fire Control
Expansion Controller
Cable
Installation Kit

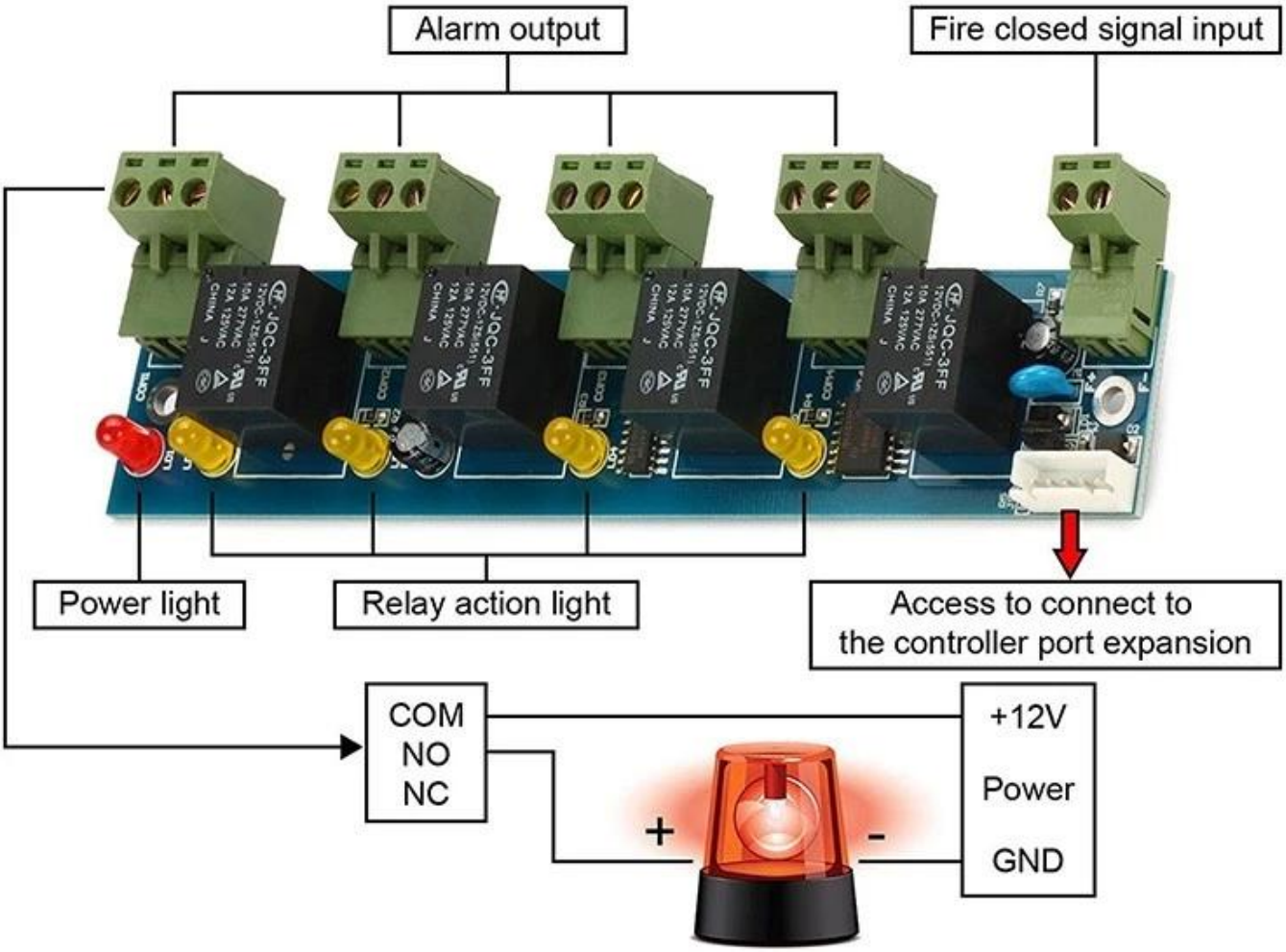
Alarm output
Fire closed signal input
Power light
Relay action light
Access to connect to
the controller port expansion
COM
NO
NC
+12V
Power
GND
+
-

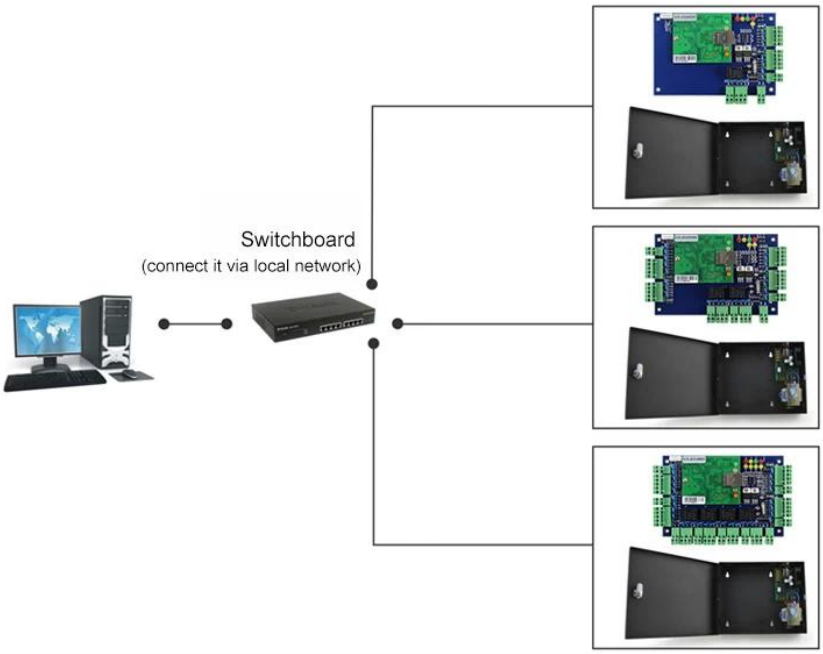

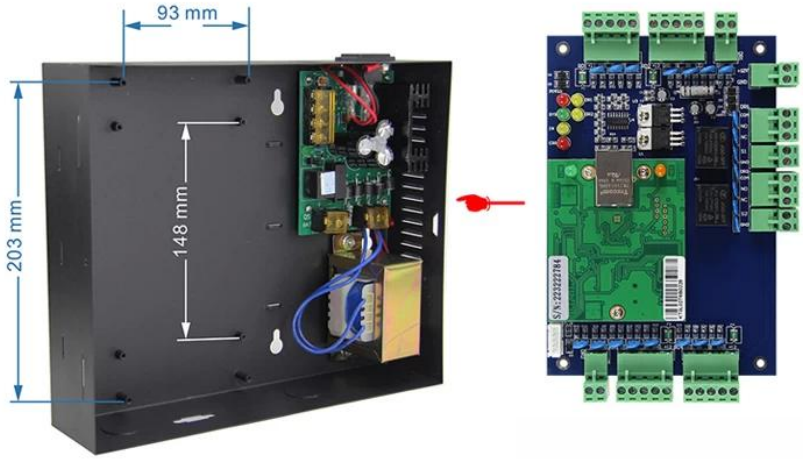

Kindly remind:

All network control board must configure with access power supply.
1 board for 1 power supply

RFID Reader | Exit Button | Electric Lock | Power Supply | Alarm and Fire Control Expansion Panel | Alarm

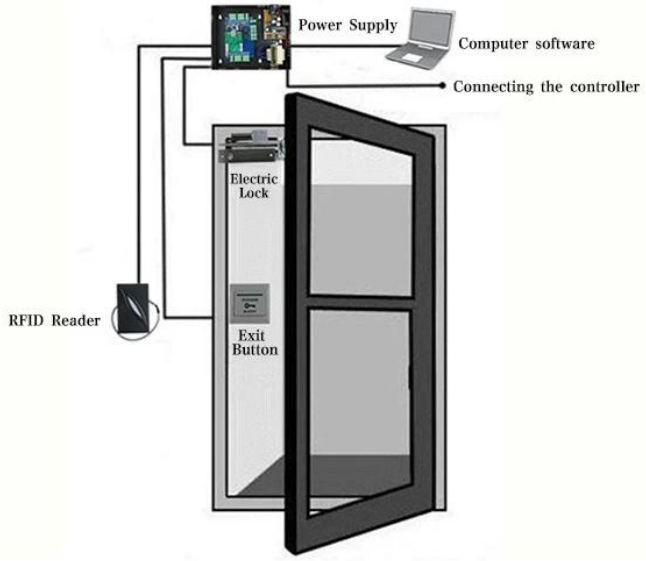

[illegible]	
[illegible]	DH-7001[illegible]DH-7002[illegible]DH-7004
[illegible]	[illegible]
[illegible]	[illegible]ACB[illegible]V6.6[illegible]
[illegible]	1[illegible]4[illegible]5[illegible]
[illegible]	[illegible]
	[illegible]0-6000[illegible]
	[illegible]0[illegible]6000[illegible]