220VAC

NC / NO

010S

215X 170 X75 MM

Power Supply
Input : AC 220V/50Hz
Output: DC 12V
Model: GC125
The following two conditions:
1.This device may not cause harmful interference
2.This device must accept any interference received

Power Supply

Power Supply

Power Supply

Power Supply
Input: AC 220V/50Hz
Output: DC 12V
The following two conditions:
1. This device may not cause
harmful interference
2. This device must accept any
interference received

Implicit batteries

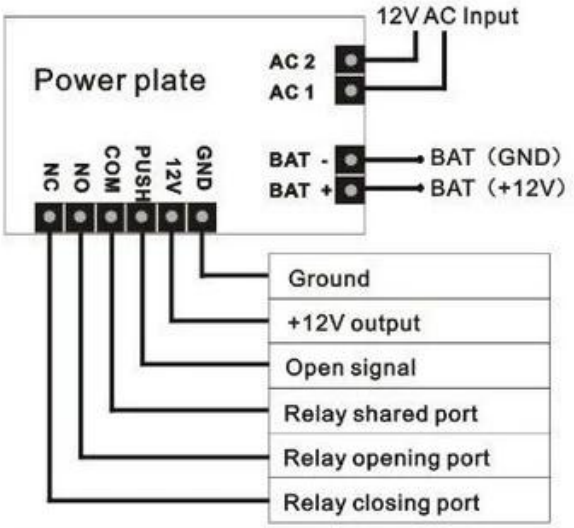
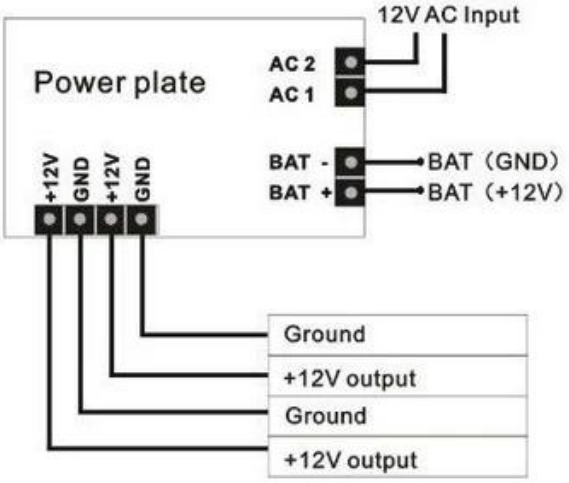
Don't implicit batteries