Alto sicurezza Cina 280 kg / 600 libbre impermeabile elettrico magnetico porta serratura per porta accesso controllo sistema

Specifiche tecniche della serratura elettromagnetica:
Tensione di lavoro: ingresso DC12V / 24V
Corrente di lavoro 500mA / 250mA
Temperatura di funzionamento: -10 ~ + 55 ℃ 14-131F
Umidità operativa: 0-90%
Forza di tenuta 280 kg / 600 libbre
Peso 1,97 kg
Dimensioni: 253 x 25 x 48 mm

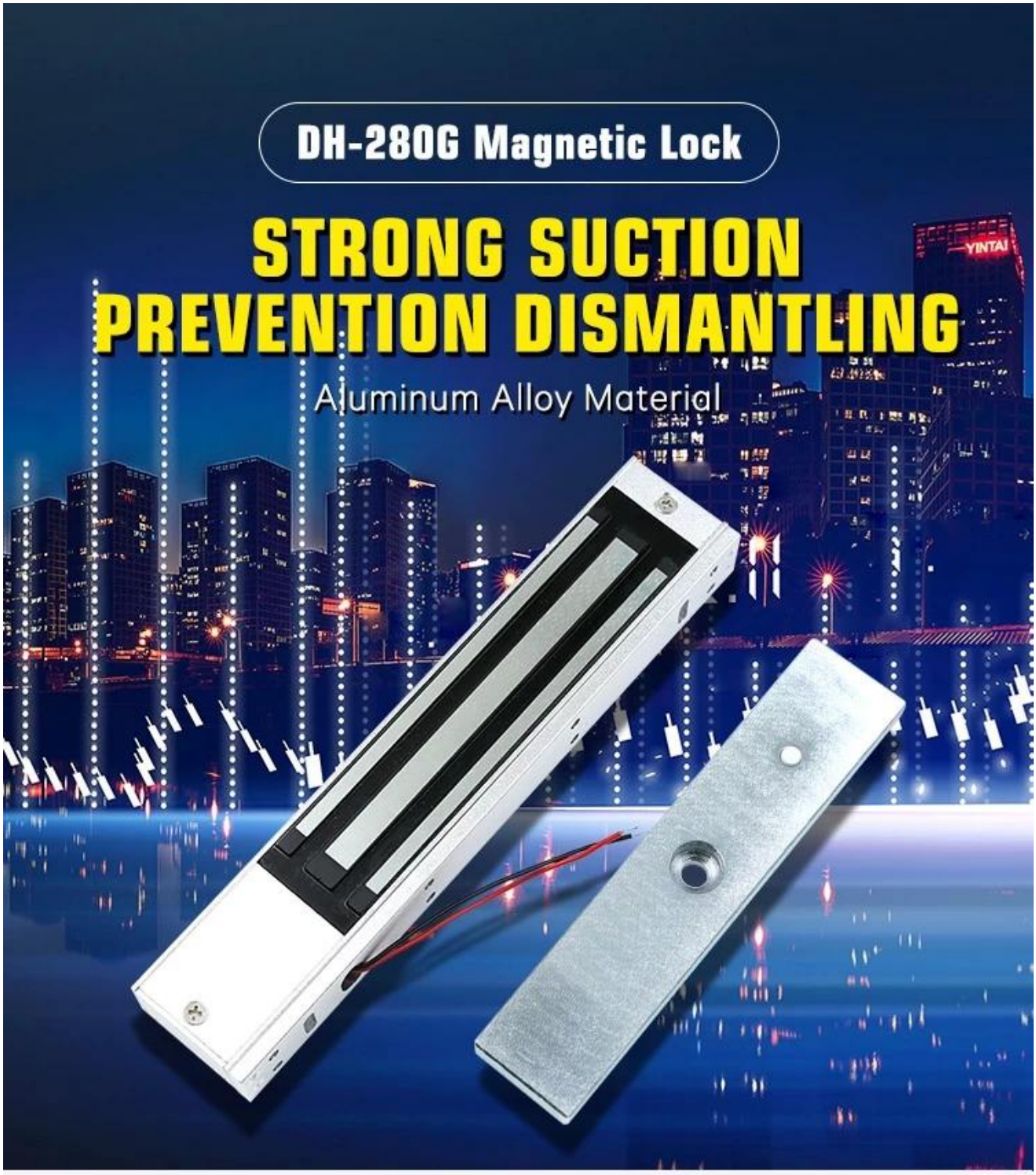

Security Burglarproof

Internal six angle screw design

Detection Feedback

Often open and normally closed signal

Good Material

High strength aluminum alloy

Product Parameters

High Qualify Life Choices

Size	253Lx25Wx48H(mm)
Holding Force	280kg(600Lbs)
Input Voltage	12 or 24VDC
Current Draw	12V/500mA or 24V/250mA
Suitable	Wooden door , Glass door ,Metal door , Fireproof door
Surface Temp	≤+20℃
Operating Temp	-10~+55℃(14-131F)
Humidity	0~90%(non-condensing)
Cover Finish	Anodized aluminum
Lock Finish	Zinc
Armature Plate Finish	Zinc
Weight	2.1KG

Diagram(unit:mm)

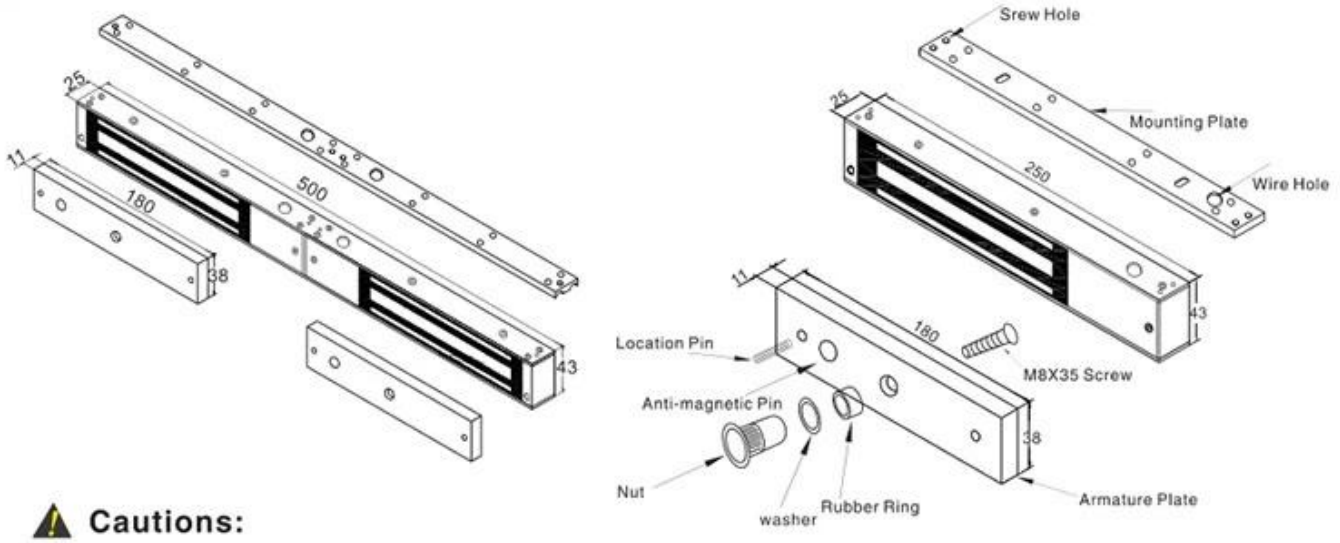

Cautions:

A. The screw of armature plate should not be fixed too tight. Proper elasticity should be guaranteed for the rubber ring so that the armature plate can adjust itself to the appropriate position.

B. Check the jumper's position before connecting. Figure out it represents 12VDC or 24VDC.

C. Please keep the surface of the lock clean, or the force will be reduced because of the dust, glue or scotch tape on it.

Installation

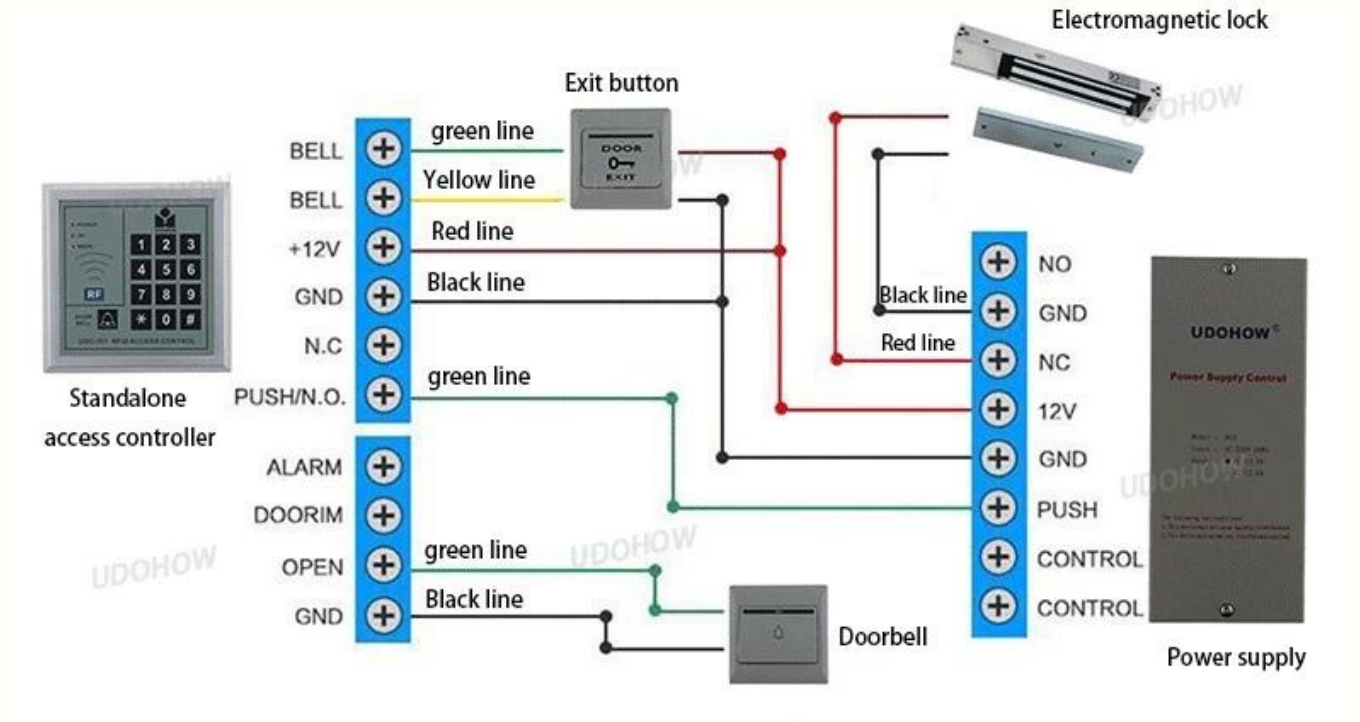

Specification

Model	Size(unit:mm)	Voltage	Current	Holding Force	Lock Signal	Door Signal	Door
DH-280G	250Lx48.5Wx25H	12/24VDC	12V/500mA 24V/250mA	280kg(600Lbs)	No	No	Single Door
DH-280GS	500Lx48.5Wx25H	12/24VDC	12V/500mAx2 24V/250mAx2	280kgx2(600Lbsx2)	No	No	Double Door
DH-280GF	250Lx48.5Wx25H	12/24VDC	12V/500mA 24V/250mA	280kg(600Lbs)	Yes	NO(B),NC(R) COM(Y)	Single Door
DH-280GSF	500Lx48.5Wx25H	12/24VDC	12V/500mAx2 24V/250mAx2	280kgx2(600Lbsx2)	Yes	NO(B),NC(R) COM(Y)	Double Door

Bracket Installation

Different brackets are available according to different types of doors. For example, narrow door , frameless glass door and inward opening door.

L Bracket-For outward opening door

When the door frame thickness is less than 42mm, L bracket is needed.

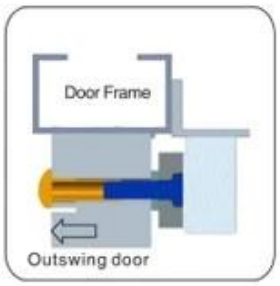

ZL Bracket-For inward opening door

For inward opening door, ZL bracket is needed.

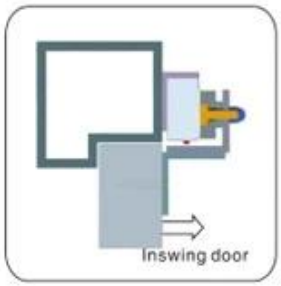

U Bracket

For the frameless glass door. U bracket is needed.

I Bracket for armature plate

When the door frame is too thick, I bracket is needed.

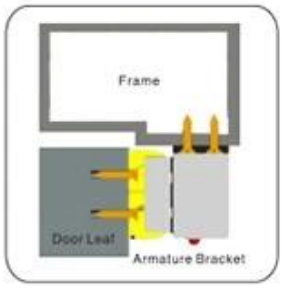

Installation Instruction

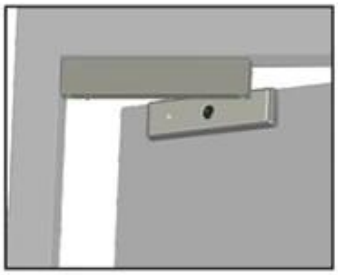

Demonstration of I Bracket Installation

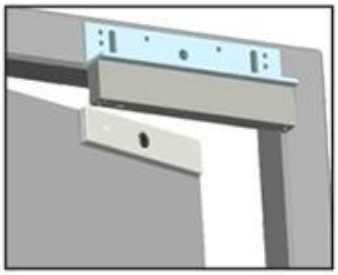

Demonstration of L Bracket Installation

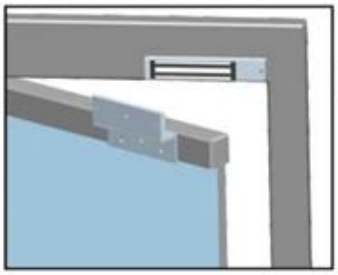

Demonstration of ZL Bracket Installation

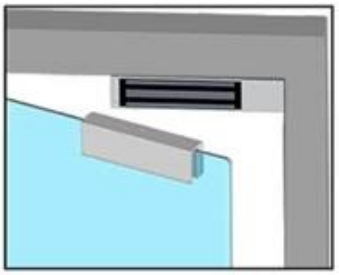

Demonstration of UL Bracket Installation

▶About us

UDOHOW

Our company is a high-tech enterprise. We havebeen specialized in the R&D, production and marketing of Access Control Products. Products include Hotel Locks, Fingerprint Locks, Keypad Locks, Electromagnetic Locks, Electric Locks, Electric Bolt Locks, Power Supplies for Access Control, Access Controllers, Access Control Boards, Access Readers, RFID Cards, Exit Buttons and Switches, Time AttendanceAccess Controls, Door Closers, Fingerprint Access Controllers, and Cabinet Locks.

Products have Certification of CE, ROHS, FCC. From the lock - lock body - electronic board, UDOHOW masters the international advanced system lock technology and has a high quality assurance.

The company Upholds thebusiness. philosophy of "Endless innovation, good faith forever" , Because of the high quality of service, we have won the trust and support of our business friends.

Our products are exported to the United States, France, Spain, Russia, Singapore, Thailand, Turkey, Holland and other countries.

CONTACT US

UDOHOW鼎昊®

Sincerely for your service

You are welcome to come to consult

Contact: Winnie Liang
Cellphone/Wechat/Whatsapp: +86 13602510930
Skype: udohow1
Email: info@udohow.com
Web: www.udohow.com

Click Back Home