UdoHow iButton-EM RFID□□□□□□□□□□□□□□□□□□□□ □□□□□□□□□ IButton-EM□□□□□□□□□125kHz□□□□□□Wiegand-26/34□□□□□□□□□□

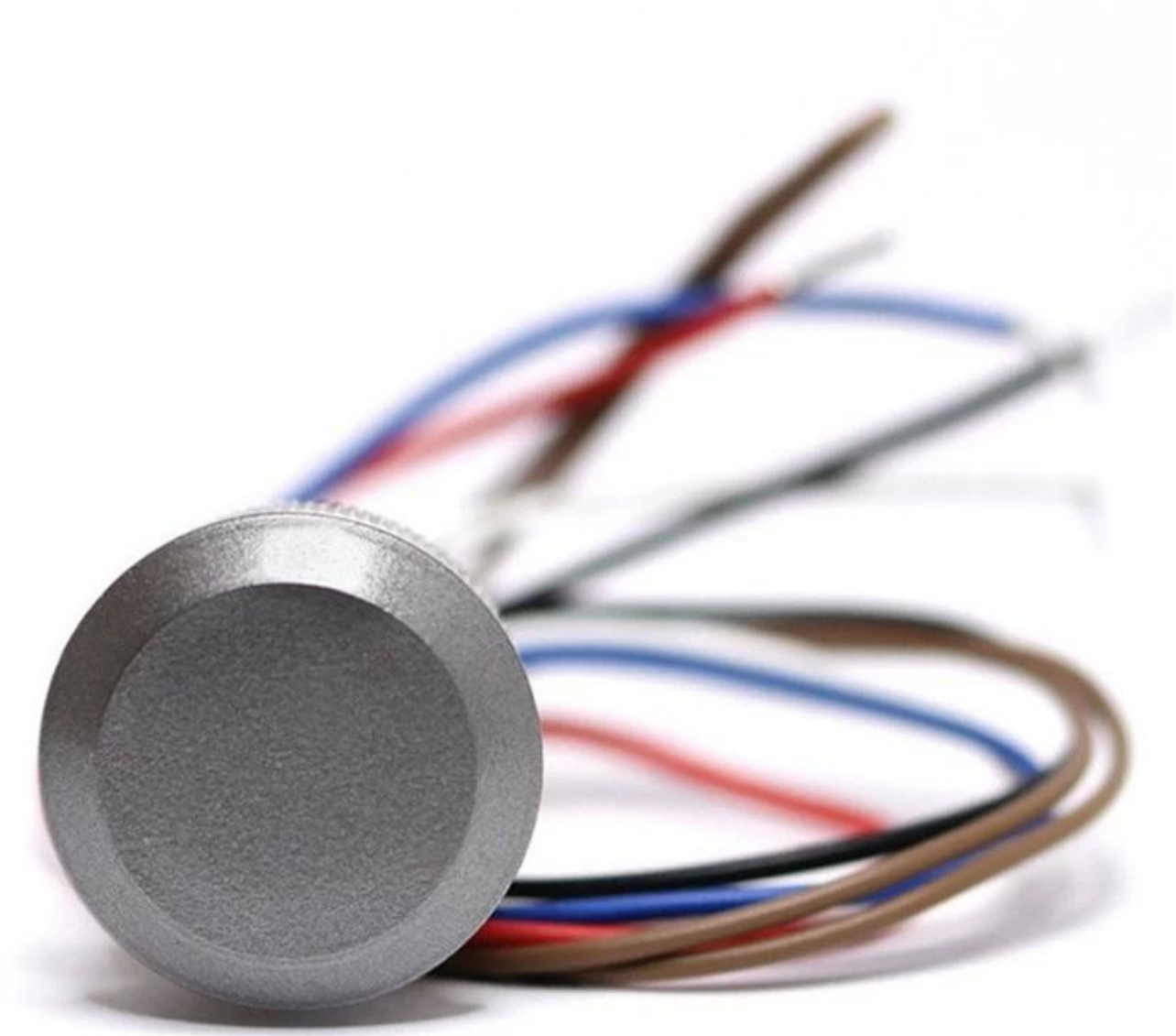

□□

□□	IButton. □□
□□□□	125khz.
□□□□	RFID□□□□
□□□□	TK4100
□□□□	Wiegand-26□Wiegand-34
RFID□□□□□cm□	0-3
□□	□
□□□□□	□□
□□□□□□	□□

□□□□□	□□
□□□□□□	□□□□□
□□□□□MA□	35mA.
□□□□	1 x□□LED
LED□□□□□□□□□	□
□□□□□°C□	-30 ... + 40
□□□□	□□□
□□□mm□	D45 x 25.

LED	Yellow
DATA1	White
+12V	Red
DATA0	Green
GND	Black

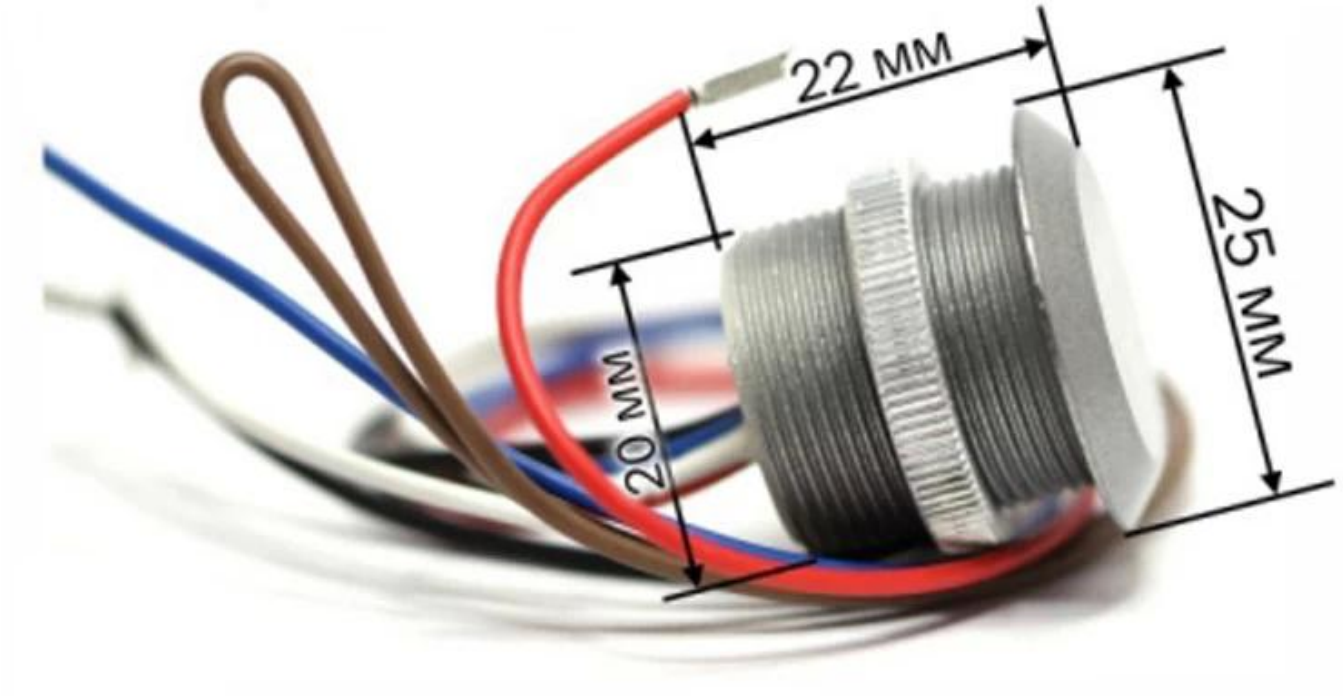
22 MM
25 MM
20 MM

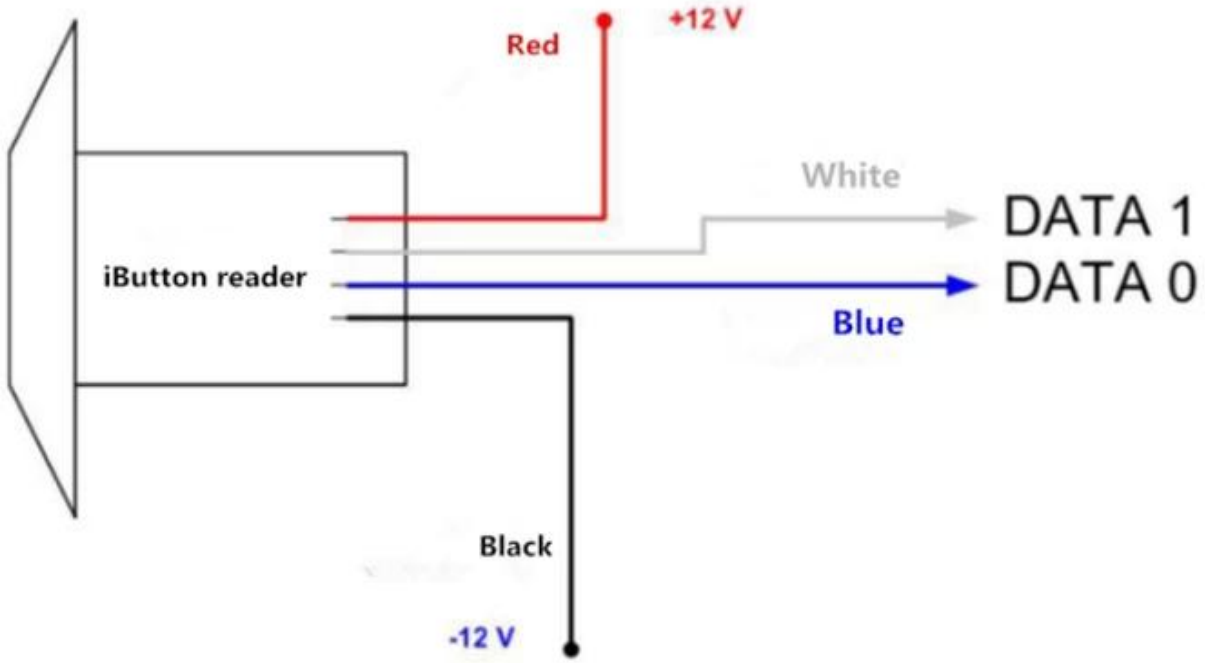
Red
+12 V
White
DATA 1
iButton reader
DATA 0
Blue
Black
-12 V

Wiegand 26

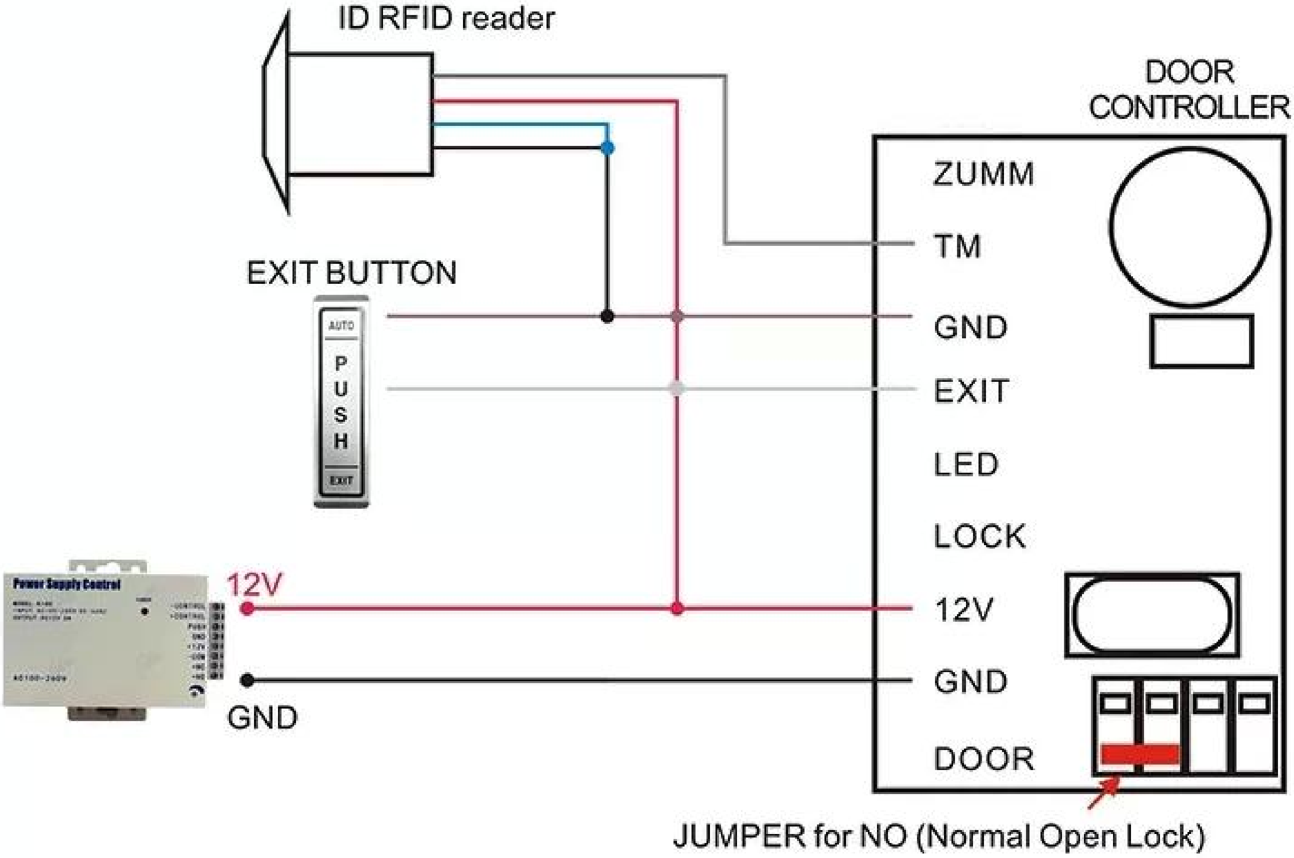

ID RFID reader
DOOR CONTROLLER
ZUMM
TM
GND
EXIT
LED
LOCK
12V
GND
DOOR
EXIT BUTTON
AUTO
PUSH
EXIT
Power Supply Control
12V
GND
JUMPER for NO (Normal Open Lock)

UdoHow 20

CONTACT US
UDOHOW鼎昊
Sincerely for your service
You are welcome to come to consult
Contact: Yimo Yang
Cellphone/Wechat/Whatsapp: +86 13612936220
Skype: udohow3
Email: udohow1@udohow.com
Web: www.udohow.com
HOME