□□□□□TCP / IP / RFID weigand rfid□□□□□DH7004

DH-7004 TCP□□□□□

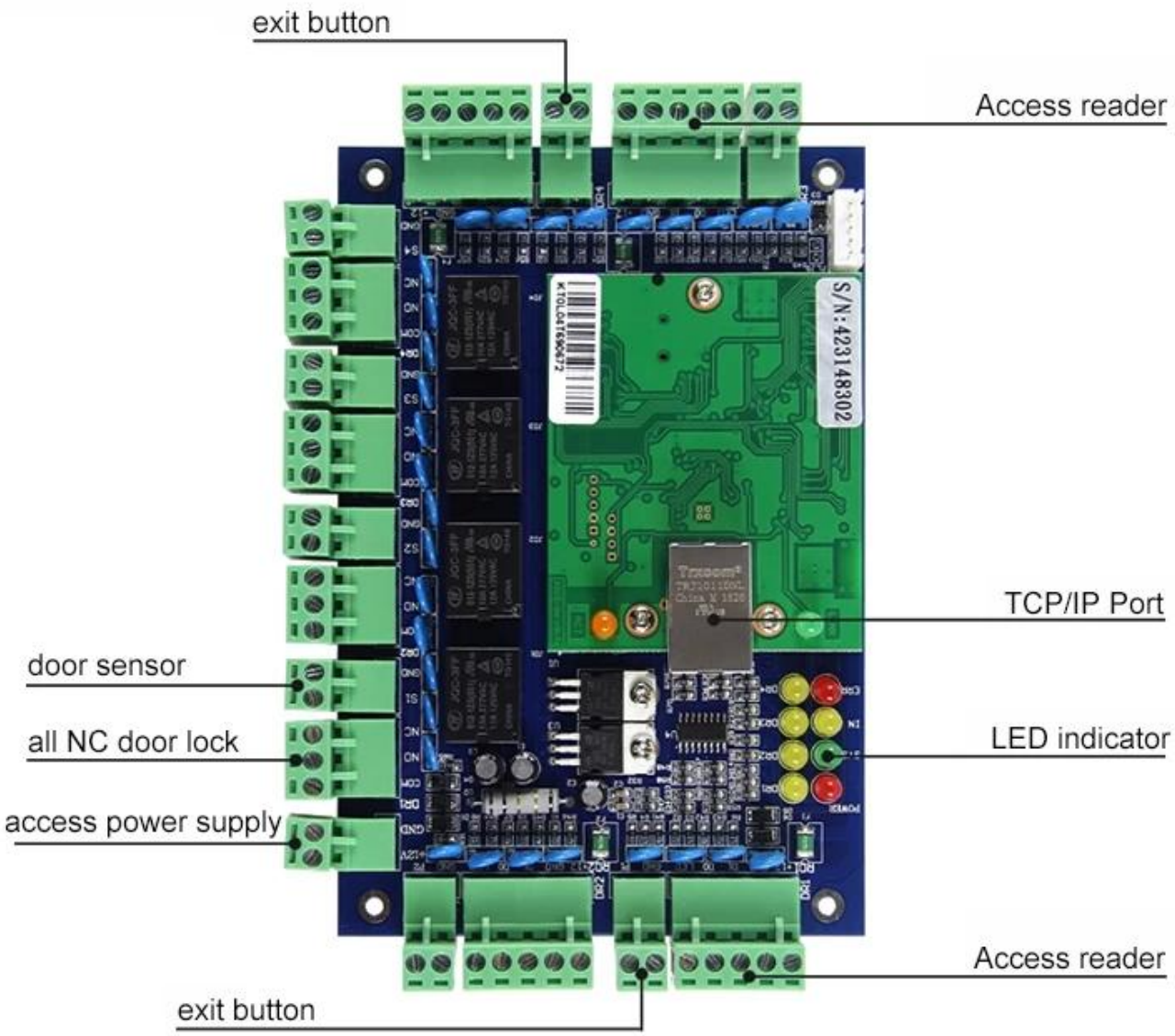
exit button
Access reader
TCP/IP Port
door sensor
all NC door lock
LED indicator
access power supply
Access reader
exit button

□□□

□□□□□□□TCP / IP□□□□□□□□□□□□□□□□□□□□□□□□□□□□□□□□□□□PC□□□□□□□□□□

□□□□□□□□□□□□□□□□□□□

▶Product Pictures:

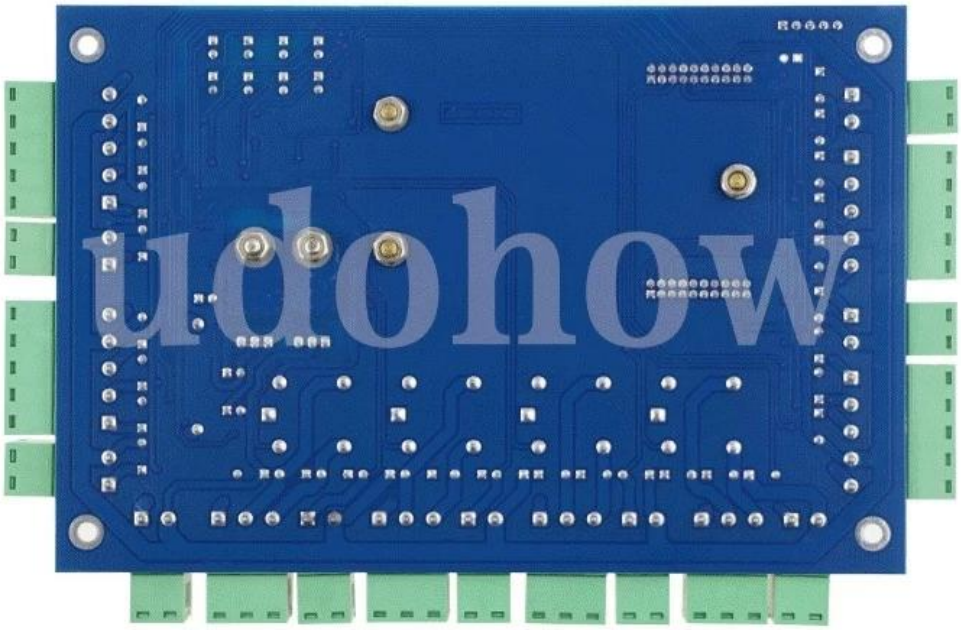

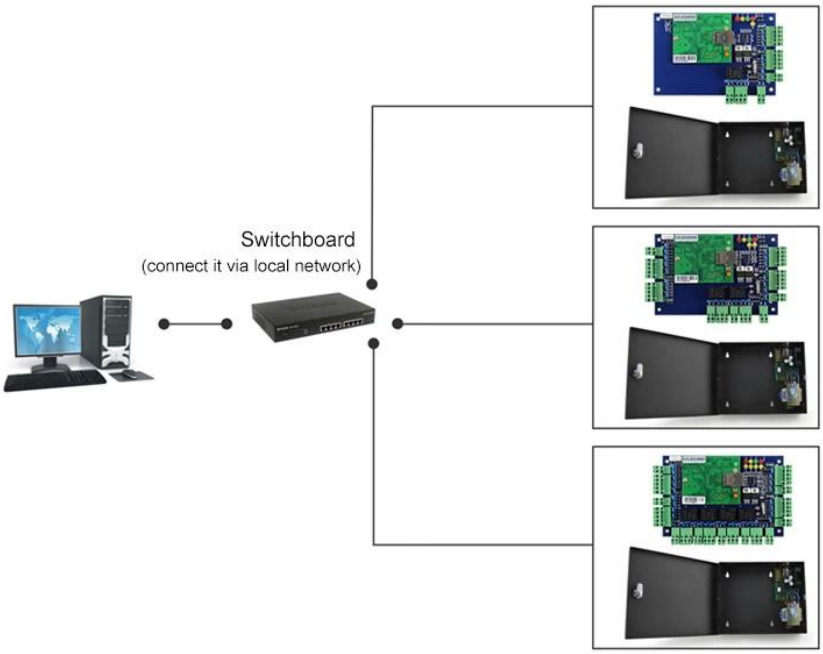

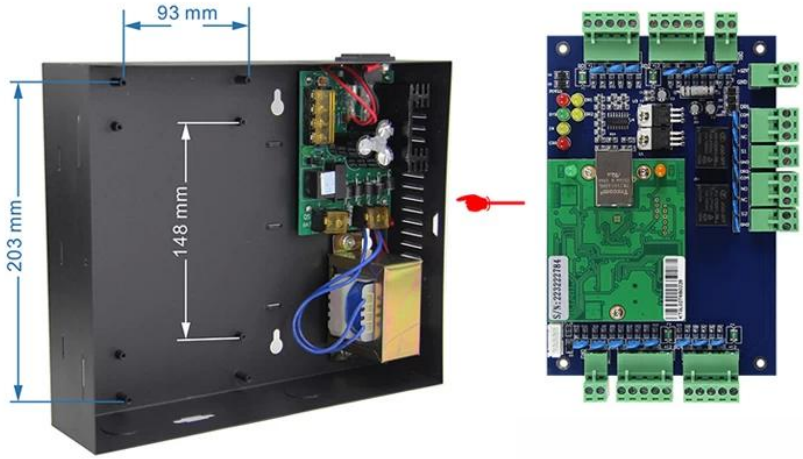

Kindly remind:

All network control board must configure with access power supply.
1 board for 1 power supply

RFID Reader | Exit Button | Electric Lock | Power Supply | Alarm and Fire Control Expansion Panel | Alarm

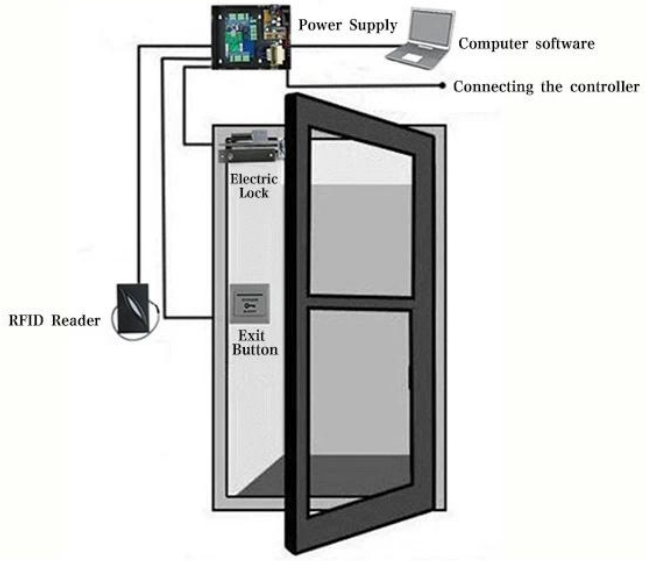

▶Application:

Networked Security School

Networked Security School

Standalone Access Contrd Airport

Standalong Access Controt House

Time Attendance Factory

Time Attcndance Office

□□□

▶About us

UDOHOW

Our company is a high-tech enterprise. We havebeen specialized in the R&D, production and marketing of Access Control Products. Products include Hotel Locks, Fingerprint Locks, Keypad Locks, Electromagnetic Locks, Electric Locks, Electric Bolt Locks, Power Supplies for Access Control, Access Controllers, Access Control Boards, Access Readers, RFID Cards, Exit Buttons and Switches, Time AttendanceAccess Controls, Door Closers, Fingerprint Access Controllers, and Cabinet Locks.

Products have Certification of CE, ROHS, FCC. From the lock - lock body - electronic board, UDOHOW masters the international advanced system lock technology and has a high quality assurance.

The company Upholds thebusiness. philosophy of "Endless innovation, good faith forever" , Because of the high quality of service, we have won the trust and support of our business friends.

Our products are exported to the United States, France, Spain, Russia, Singapore, Thailand, Turkey, Holland and other countries.