للكهرباء 180 كجم 280 كجم قفل الباب المغناطيسي ZL قوس

مقدمة المنتج

للقفل الكهرومغناطيسي ZL قوس شكل
الموديل: DH-280ZL / DH-180ZL
مناسب لـ: باب خشبي ، باب مقاوم للحريق
(LBS تستخدم للقفل الكهرومغناطيسي للباب الواحد DH-280ZL 600)
(LBS استخدام للقفل الكهرومغناطيسي باب واحد DH-180ZL 300)

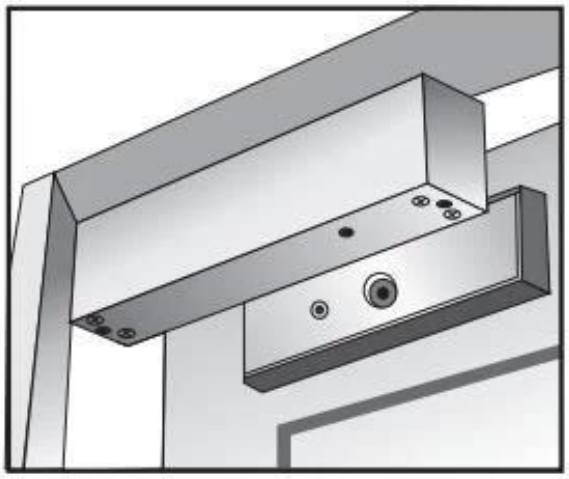

Armature Plate

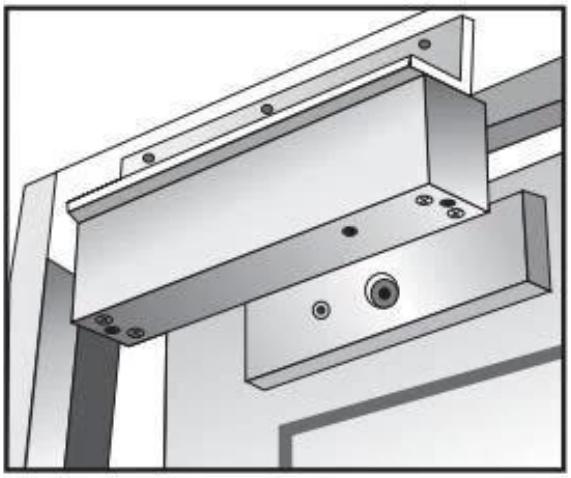

L BRACKET

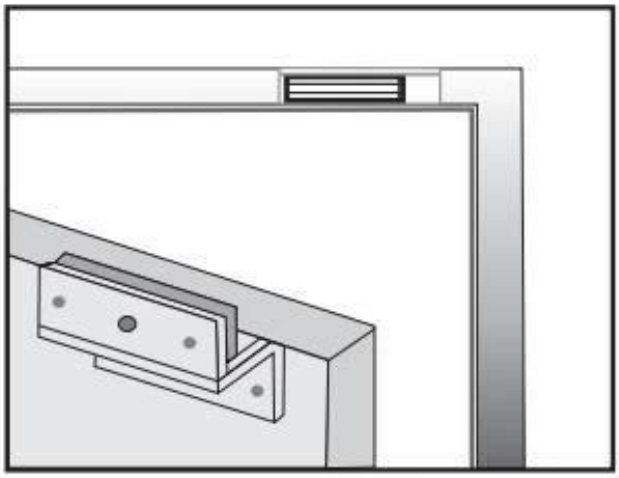

ZL BRACKET

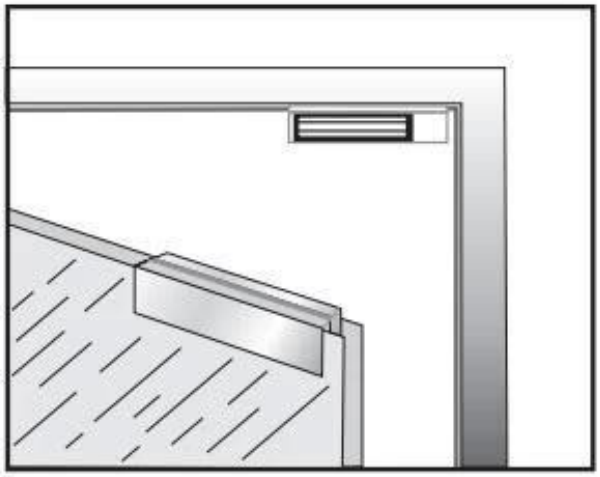

U BRACKET

▶Optional Accessories

U bracket

L bracket

Z Bracket

UDOHOW Magnetic lock Series

Holding Force : 180kg/375lbs		
DH-180G	DH-180A	DH-180GS
Holding Force : 280kgs/600lbs		
DH-280G	DH-280A	DH-280GS
Holding Force : 350kgs/750lbs		
DH-350G	DH-350A	DH-350GS

Holding Force:60KG/100lbs	Holding Force : 500kg/1200lbs
DH-60G	DH-500G

لناشركة

ABOUT US

COMPANY INTRODUCTION

UDOHOW Electronics Co., Limited is a high-tech enterprise located in Guangdong Province, China. We're one of the leading manufacturers specialized in Intelligent Locks and Access Control Products including: Hotel Locks, Fingerprint Locks, Keypad Locks, Cabinets Locks, Electric Locks, Exit Switches and other related security access control products.

Our products have received good comments and trust of customers by superior quality, advanced innovation and considerate service.

+ View More

FACTORY / WORKSHOP / EXHIBITION

لناالشهادات

OUR CERTIFICATE

اتصل بنا

CONTACT US

UDOHOW鼎昊®

Sincerely for your service

You are welcome to come to consult

Contact: Winnie Liang
Cellphone/Wechat/Whatsapp: +86 13602510930
Skype: udohow1
Email: info@udohow.com
Web: www.udohow.com

Click Back Home